TITAN HEAVY DUTY RANGE – ELECTRIC FRAMES

Engineered for demanding environments, the TITAN Workstation is built to deliver exceptional strength, flexibility, and long-term reliability. Designed around our heavy-duty TITAN platform, it provides a lifting capacity of up to 450kg, making it ideal for mission-critical spaces where multiple monitors, specialist equipment, and continuous operation are essential.

Its modular frame design allows for a wide range of configurations, including U-shaped, curved, and extra-long right-angle layouts, making it easy to accommodate unique room designs and operator requirements. The robust steel construction ensures outstanding stability, while the adjustable frame system allows for customised workstation dimensions without compromising performance.

Whether specifying a single operator station or a large multi-user control room, the TITAN Control Room Workstation delivers the durability, adaptability, and ergonomic performance required for 24/7 operational environments.

Product Type	Heavy Lift electric workstation - 1 motor per leg
Certifications	AS/NZS 4442 standards compliant
Weight Capacity	TITAN20 - 200kg
	TITAN30 - 300kg
	TITAN45 - 450kg
	TITANC Series - 100kg per leg
Height Range	TITAN20/30/C Series - 635mm - 1297mm ex. top (3-stage)
	TITAN45 - 700 - 1180mm ex. top (2-stage)
Operational Speed	20mm/sec at maximum weight load
	Operating volume less than 40dB
Configuration	2-leg desk
	3-leg workstation
	4-leg heavy duty desk
	Multi-leg custom workstations, up to 12x legs operating on one controller
Frame Finish	Pearl White (*W), Jet Black ('B)
Warranty	TITAN - 10 years parts replacement all components
	TITANC - 3 years parts replacement (based on 24/7 use)
Controller Features	Lockable LED controller
	3 favourite settings
	Programmable min/max height range
	Collision and tilt avoidance sensors
	Safety lock
	USB-C fast charging port

TITAN-20

Freestanding 2-Leg

Top Dimensions

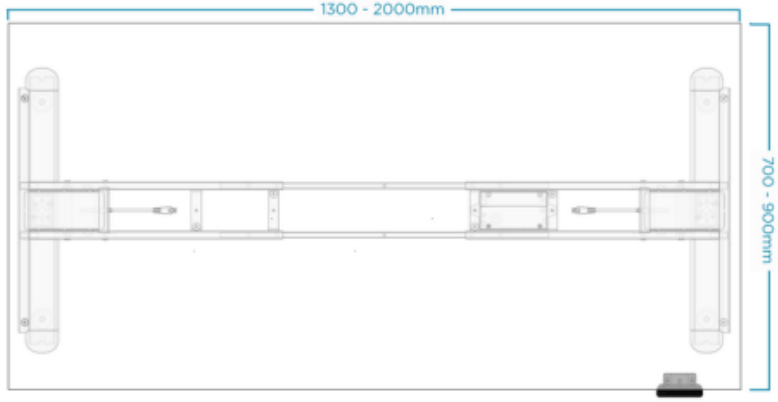

Frame / Height Dimensions

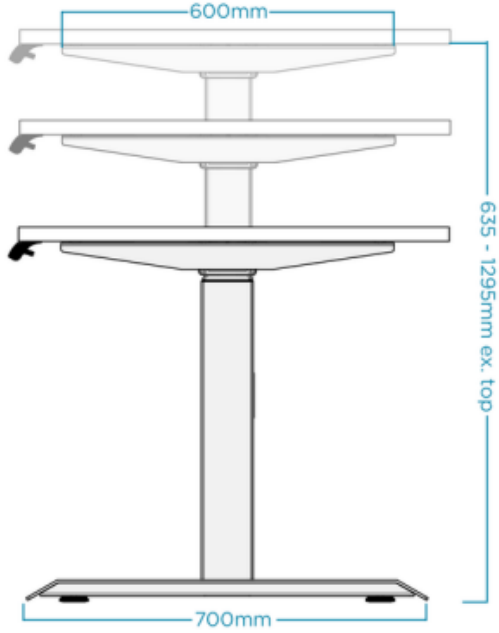

Frame Dimensions

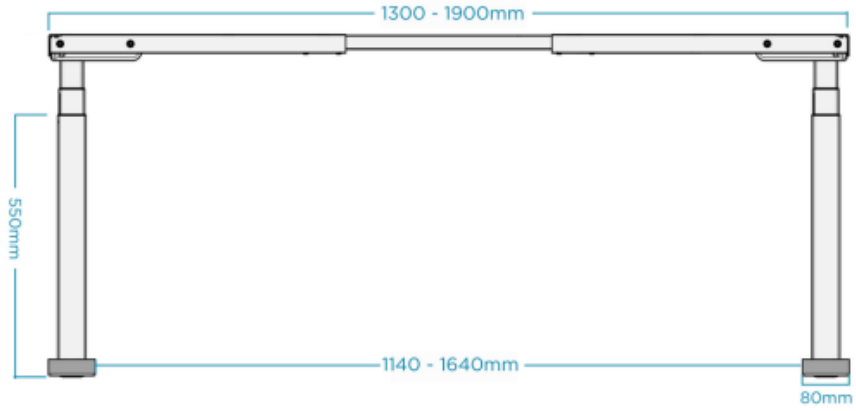

Leg Colmun Width

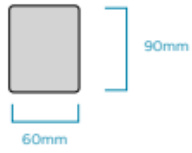

p: 07 5437 7622
e: sales@imagebusinessfurniture.com.au

IMAGE
BUSINESS FURNITURE

TITAN-30

3-Leg, 3-Motor Electric Workstation

Top Size Dimensions

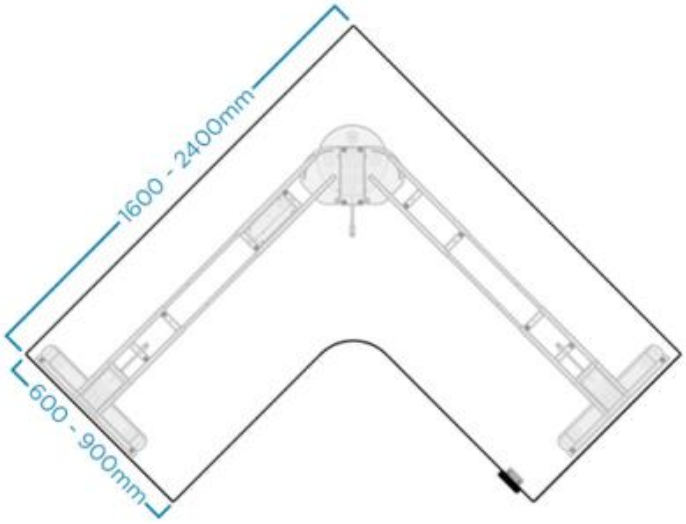

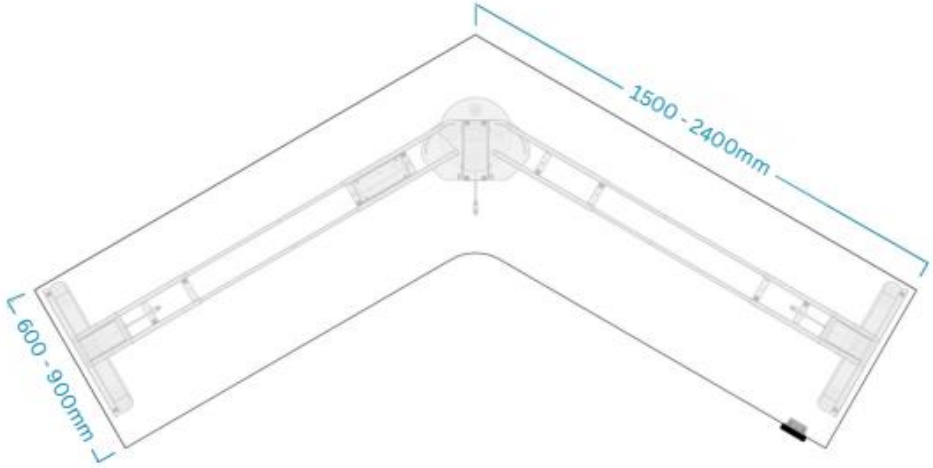

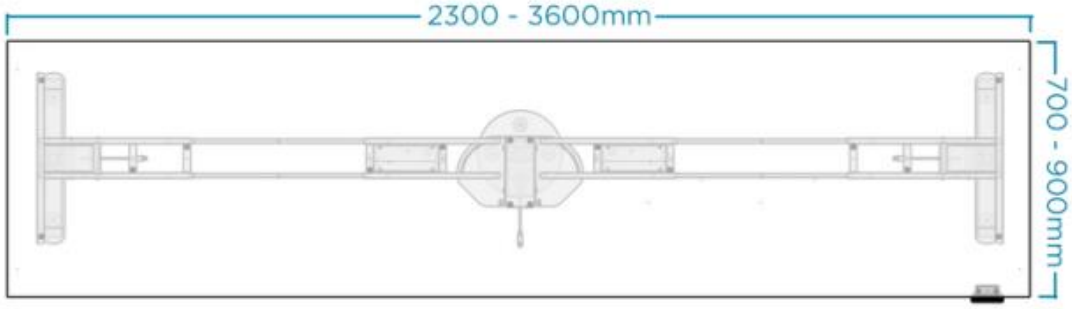



p: 07 5437 7622
e: sales@imagebusinessfurniture.com.au

TITAN-45

Heavy Duty Workstation system

Frame Dimensions

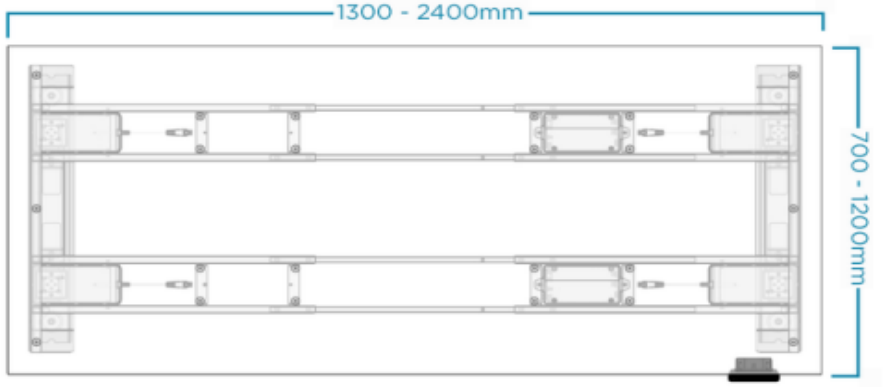

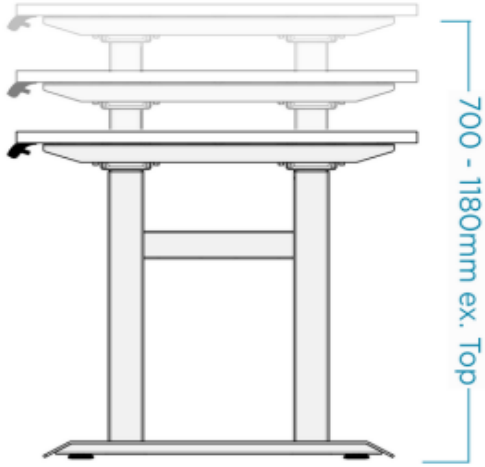

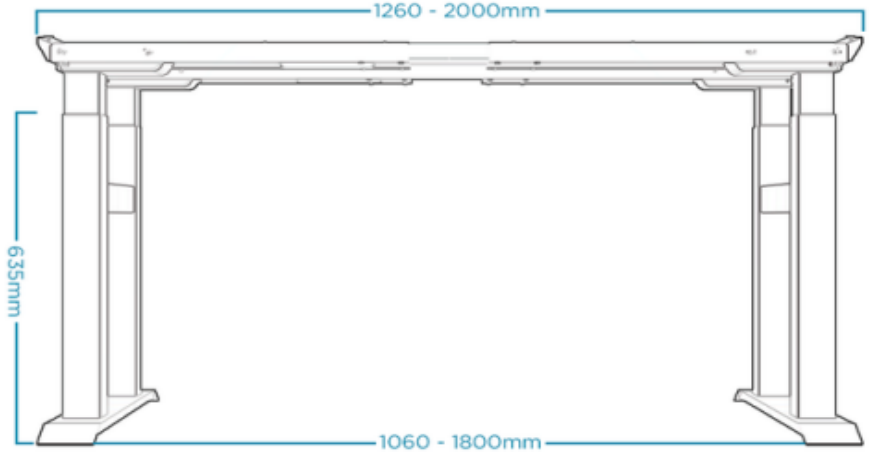

p: 07 5437 7622
e: sales@imagebusinessfurniture.com.au

IMAGE
BUSINESS FURNITURE

TITAN-C40 90 Degree

Heavy Duty Custom Workstation system

Frame Dimensions

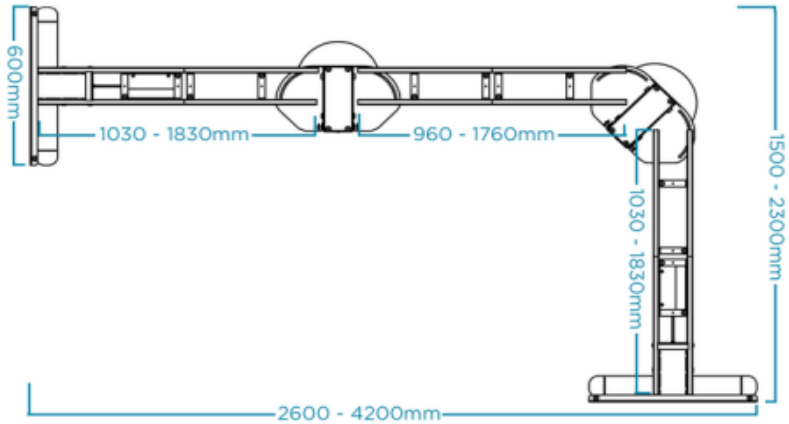

Top Dimensions

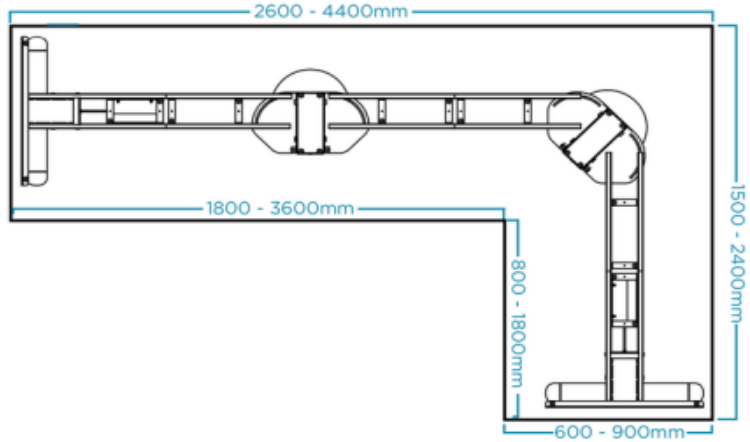

Space between feet

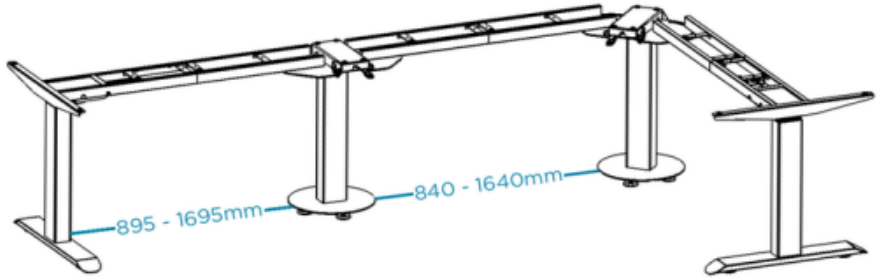

*also available in 50-leg 90°

Foot Width and Height range

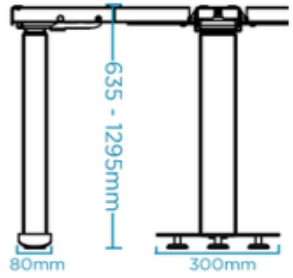

p: 07 5437 7622
e: sales@imagebusinessfurniture.com.au

Your Image is our Business

IMAGE
BUSINESS FURNITURE

TITAN-C40 90 Degree U Shape

Heavy Duty Custom Workstation system

Frame Dimensions

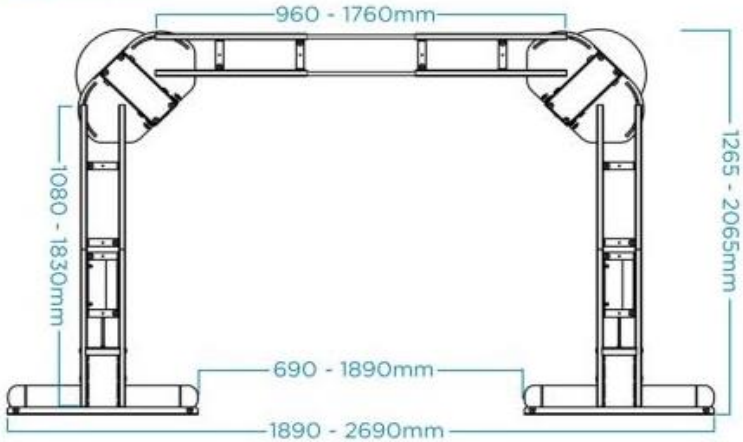

Top Dimensions

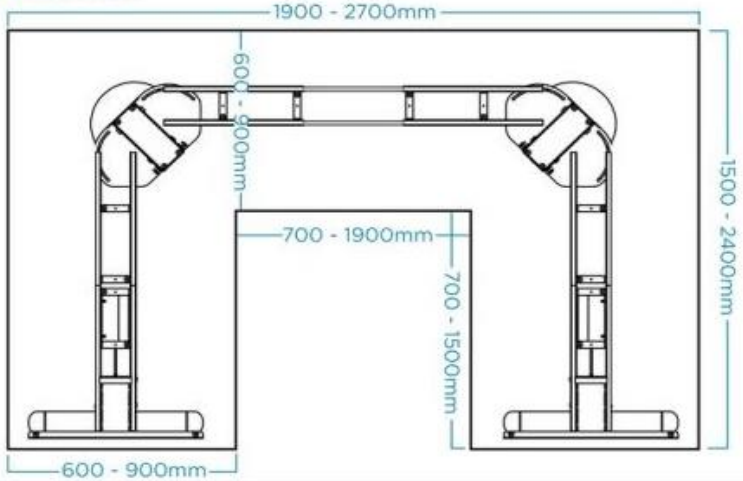

Space between feet

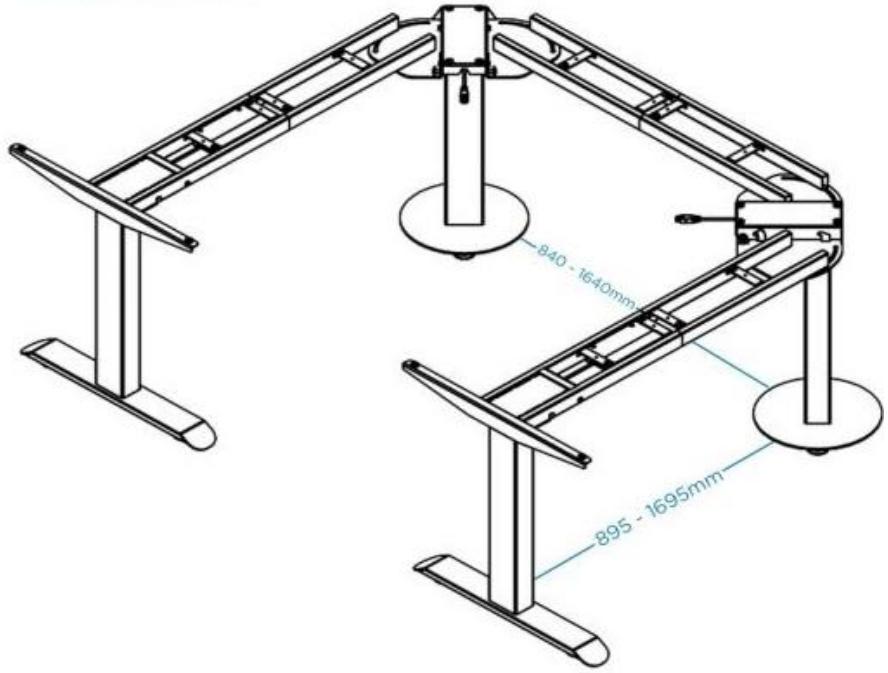

p: 07 5437 7622
e: sales@imagebusinessfurniture.com.au

TITAN-C40 120 Degree

Heavy Duty Custom Workstation system

Frame Dimensions

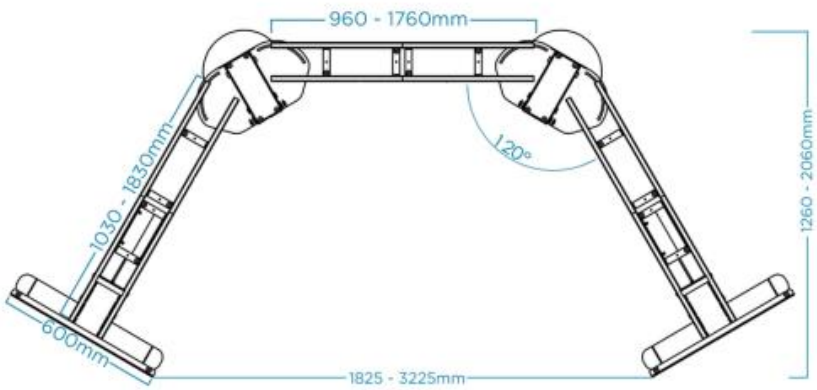

Top Dimensions

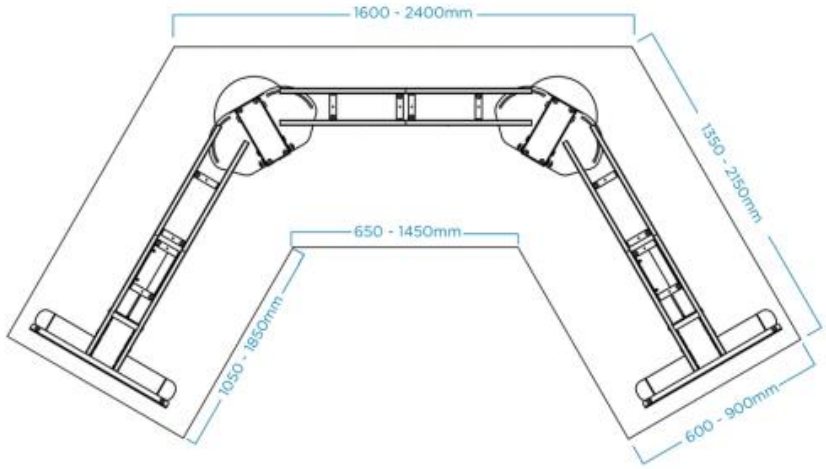

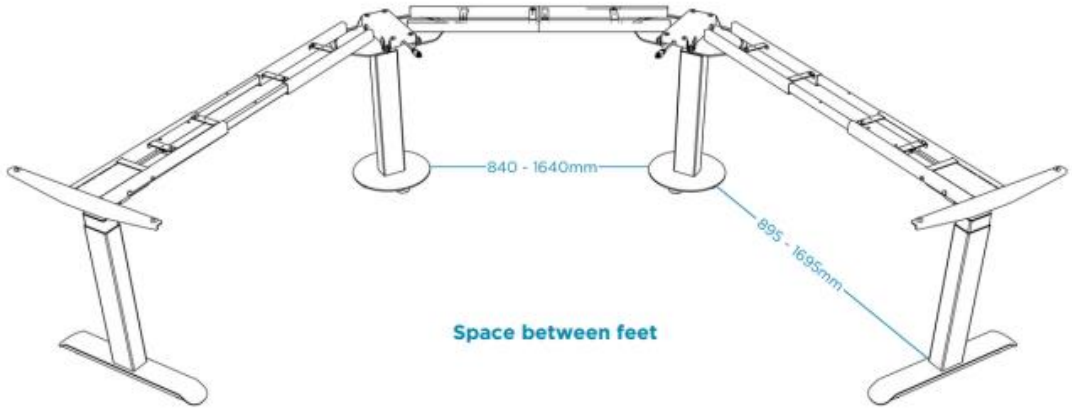

Space between feet

p: 07 5437 7622
e: sales@imagebusinessfurniture.com.au